FEDERAL SUPPLY CLASS
4730

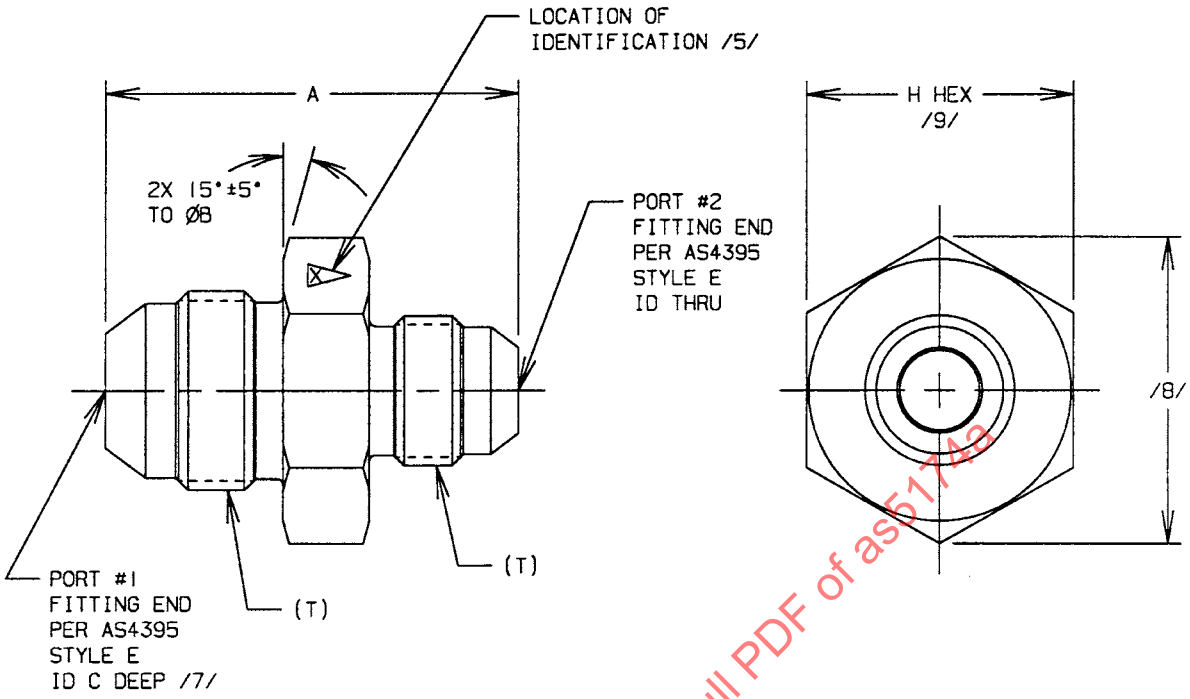

FIGURE 1 - FITTING, UNION AND REDUCER

SAENORM.COM : Click to view the full PDF of as5174a

THIRD ANGLE PROJECTION

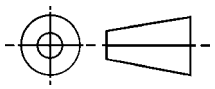

ISSUED 1998-03 REVISED 2003-08

CUSTODIAN: SAE G-3/G-3B

PROCUREMENT SPECIFICATION: /4/ AS4841

SAE Aerospace
An SAE International Group

AEROSPACE STANDARD

FITTING, UNION AND REDUCER, FLARED

AS5174
SHEET 1 OF 6

REV. A

SAE Technical Standards Board Rules provide that: "This report is published by SAE to advance the state of technical and engineering sciences. The use of this report is entirely voluntary, and its applicability and suitability for any particular use, including any patent infringement arising therefrom, is the sole responsibility of the user."

SAE reviews each technical report at least every five years at which time it may be reaffirmed, revised, or cancelled. SAE invites your written comments and suggestions.

Copyright 2003 SAE International
All rights reserved. No part of this publication may be reproduced, stored in a retrieval system or transmitted, in any form or by any means, electronic, mechanical, photocopying, recording, or otherwise, without the prior written permission of SAE.
TO PLACE A DOCUMENT ORDER: **Tel: 877-606-7323 (inside USA and Canada)** **Tel: 724-776-4970 (outside USA)**
Fax: 724-776-0790 **Email: custsvc@sae.org** **SAE WEB ADDRESS: http://www.sae.org**

SAE Aerospace
An SAE International Group

SAENORM.COM : Click to view the full PDF of as5174a

TABLE 1A - DIMENSIONS /11/

PORT #1 /17/ SIZE CODE	A PORT #2 SIZE CODE 02	A PORT #2 SIZE CODE 03	A PORT #2 SIZE CODE 04	A PORT #2 SIZE CODE 05	A PORT #2 SIZE CODE 06	A PORT #2 SIZE CODE 08	A PORT #2 SIZE CODE 10	A PORT #2 SIZE CODE 12	A PORT #2 SIZE CODE 16	A PORT #2 SIZE CODE 20	A PORT #2 SIZE CODE 24	A PORT #2 SIZE CODE 28	A PORT #2 SIZE CODE 32	A PORT #2 SIZE CODE 40	A PORT #2 SIZE CODE 48
02	1.219	–	–	–	–	–	–	–	–	–	–	–	–	–	–
03	1.172	1.219	–	–	–	–	–	–	–	–	–	–	–	–	–
04	~~1.250~~	1.281	1.250	–	–	–	–	–	–	–	–	–	–	–	–
05	–	–	1.359	1.250	–	–	–	–	–	–	–	–	–	–	–
06	~~1.297~~	~~1.328~~	1.406	1.406	1.375	–	–	–	–	–	–	–	–	–	–
08	~~1.422~~	~~1.453~~	~~1.531~~	1.531	1.531	1.562	–	–	–	–	–	–	–	–	–
10	–	–	~~1.656~~	–	1.656	1.750	1.828	–	–	–	–	–	–	–	–
12	–	–	~~1.797~~	~~1.797~~	~~1.797~~	1.891	2.000	2.109	–	–	–	–	–	–	–
16	–	–	~~1.844~~	–	–	~~2.156~~	2.047	2.156	2.188	–	–	–	–	–	–
20	–	–	~~1.891~~	–	–	–	–	2.250	2.250	2.281	–	–	–	–	–
24	–	–	–	–	–	–	–	–	2.359	2.406	2.531	–	–	–	–
28	–	–	–	–	–	–	–	–	–	–	–	2.812	–	–	–
32	–	–	–	–	–	–	–	–	–	–	–	–	3.062	–	–
40	–	–	–	–	–	–	–	–	–	–	–	–	–	2.875	–
48	–	–	–	–	–	–	–	–	–	–	–	–	–	–	3.062

TABLE 1B - DIMENSIONS

PORT #1 /17/ SIZE CODE	C ± .031 PORT #2 SIZE CODE 02	C ± .031 PORT #2 SIZE CODE 03	C ± .031 PORT #2 SIZE CODE 04	C ± .031 PORT #2 SIZE CODE 05	C ± .031 PORT #2 SIZE CODE 06	C ± .031 PORT #2 SIZE CODE 08	C ± .031 PORT #2 SIZE CODE 10	C ± .031 PORT #2 SIZE CODE 12	C ± .031 PORT #2 SIZE CODE 16	C ± .031 PORT #2 SIZE CODE 20	C ± .031 PORT #2 SIZE CODE 24	C ± .031 PORT #2 SIZE CODE 28	C ± .031 PORT #2 SIZE CODE 32	C ± .031 PORT #2 SIZE CODE 40	C ± .031 PORT #2 SIZE CODE 48
02	–	–	–	–	–	–	–	–	–	–	–	–	–	–	–
03	.625	–	–	–	–	–	–	–	–	–	–	–	–	–	–
04	.688	.578	–	–	–	–	–	–	–	–	–	–	–	–	–
05	–	–	.609	–	–	–	–	–	–	–	–	–	–	–	–
06	.625	.625	.625	.625	–	–	–	–	–	–	–	–	–	–	–
08	.719	.719	.719	.719	.719	–	–	–	–	–	–	–	–	–	–
10	–	–	.797	–	.797	.797	–	–	–	–	–	–	–	–	–
12	–	–	.891	.891	.891	.891	.891	–	–	–	–	–	–	–	–
16	–	–	.891	–	–	.891	.891	.891	–	–	–	–	–	–	–
20	–	–	.859	–	–	–	–	.859	.859	–	–	–	–	–	–
24	–	–	–	–	–	–	–	–	.906	.906	–	–	–	–	–
28	–	–	–	–	–	–	–	–	–	–	–	–	–	–	–
32	–	–	–	–	–	–	–	–	–	–	–	–	–	–	–
40	–	–	–	–	–	–	–	–	–	–	–	–	–	–	–
48	–	–	–	–	–	–	–	–	–	–	–	–	–	–	–

SAENORM.COM : Click to view the full PDF of as5174a

TABLE 1C - DIMENSIONS AND WEIGHTS /10/

PORT SIZE CODE	(NOMINAL TUBE SIZE)	T THREAD PER MIL-S-8879 CLASS 3A	B ±.010	H	LB/EA MAX AL	LB/EA MAX STEEL	LB/EA MAX TI
02	.125	.3125-24 UNJF	.542	.552- .565	.0350	.0724	.0554
03	.188	.3750-24 UNJF	.605	.615- .628	.0443	.0916	.0702
04	.250	.4375-20 UNJF	.668	.678- .691	.0556	.115	.0881
05	.312	.5000-20 UNJF	.730	.740- .753	.0662	.137	.105
06	.375	.5625-18 UNJF	.792	.802- .815	.0762	.158	.121
08	.500	.7500-16 UNJF	.980	.990-1.003	.126	.260	.199
10	.625	.8750-14 UNJF	1.103	1.113-1.128	.165	.341	.261
12	.750	1.0625-12 UNJ	1.353	1.363-1.380	.250	.517	.396
16	1.000	1.3125-12 UNJ	1.603	1.613-1.630	.347	.719	.550
20	1.250	1.6250-12 UNJ	1.853	1.863-1.880	.484	1.00	.766
24	1.500	1.8750-12 UNJ	2.099	2.109-2.135	.636	1.32	1.01
28	1.750	2.2500-12 UNJ	2.474	2.484-2.510	.781	1.62	1.24
32	2.000	2.5000-12 UNJ	2.724	2.734-2.760	1.18	2.45	1.87
40	2.500	3.0000-12 UNJ	3.224	3.234-3.260	1.32	2.74	2.10
48	3.000	3.5000-12 UNJ	3.724	3.734-3.760	1.38	2.87	2.19

NOTES:

/1/ MATERIAL:

a. DASH AS CODE LETTER - TYPE 1137 CARBON STEEL PER ASTM A 108 OR TYPE 4130 PER MIL-S-6758 OR AMS 6370 OR TYPE 4140 PER MIL-S-5626 OR AMS 6382.
b. CODE LETTER D - TYPE 2024-T6 ALUMINUM ALLOY BAR PER QQ-A-225/6 OR AMS 4112 OR TYPE 2024-T851 ALUMINUM ALLOY BAR PER QQ-A-225/6.
c. CODE LETTER J - TYPE 304 CORROSION RESISTANT STEEL BAR PER QQ-S-763 OR AMS 5639.
d. CODE LETTER K - TYPE 316 CORROSION RESISTANT STEEL BAR PER QQ-S-763 OR AMS 5648.
e. CODE LETTER R - TYPE 321 CORROSION RESISTANT STEEL BAR PER QQ-S-763 OR AMS 5645.
f. CODE LETTER T - TYPE 6AL-4V TITANIUM ALLOY BAR PER AMS 4928.
g. CODE LETTER W - TYPE 7075-T73 ALUMINUM ALLOY BAR PER QQ-A-225/9 OR TYPE 7075-T7351 ALUMINUM ALLOY BAR PER AMS 4124.

/2/ HEAT TREATMENT:

a. DASH AS CODE LETTER - SEE HARDNESS REQUIREMENT PER PROCUREMENT SPECIFICATION.
b. OTHER CODE LETTERS - NONE.

SAENORM.COM : Click to view the full PDF of as5174a